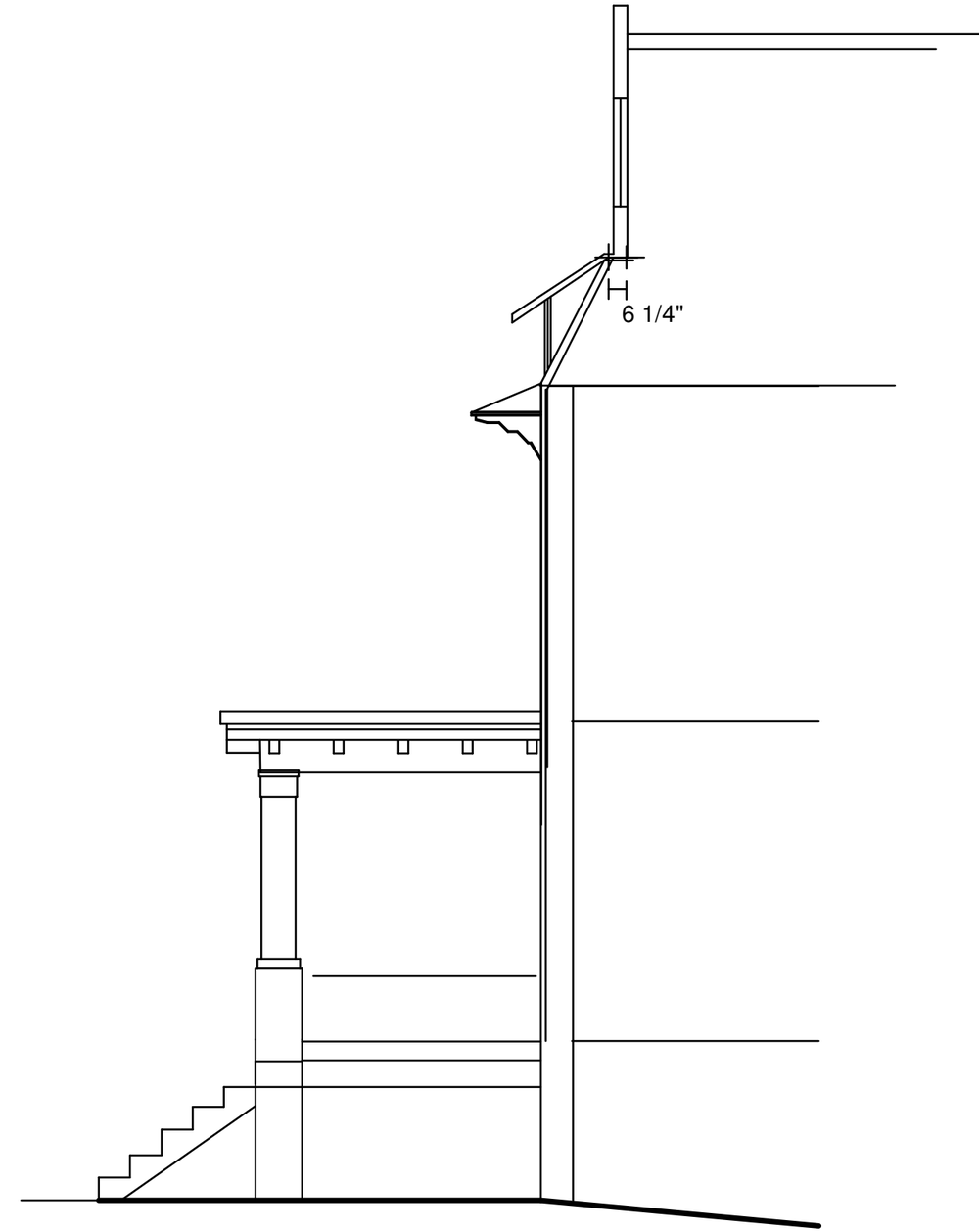

ELEVATION 03