EXISTING WALL SURFACE TO REMAIN

NORTH	426.5sf
EAST	238sf
SOUTH	470.5sf
WEST	100sf
TOTAL	1235sf

TOTAL EXISTING WALL SURFACE

NORTH	585.5sf
EAST	865sf
SOUTH	590.5sf
WEST	427sf
TOTAL	2468sf

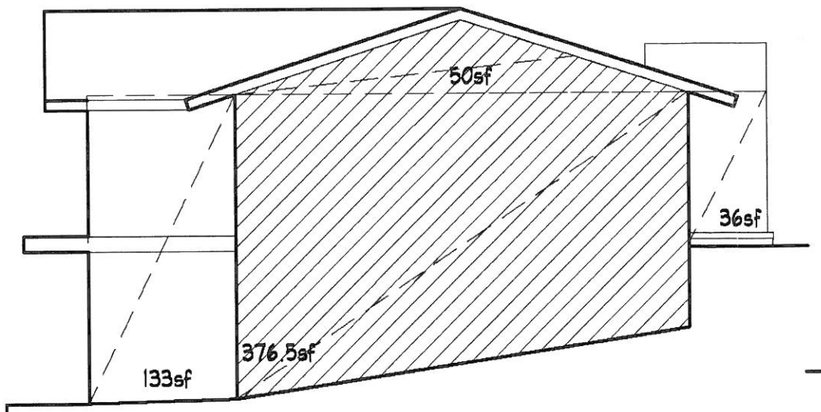

NORTH

TOTAL EXISTING WALL SURFACE	585.5sf
EXISTING WALL TO REMAIN	426.5sf

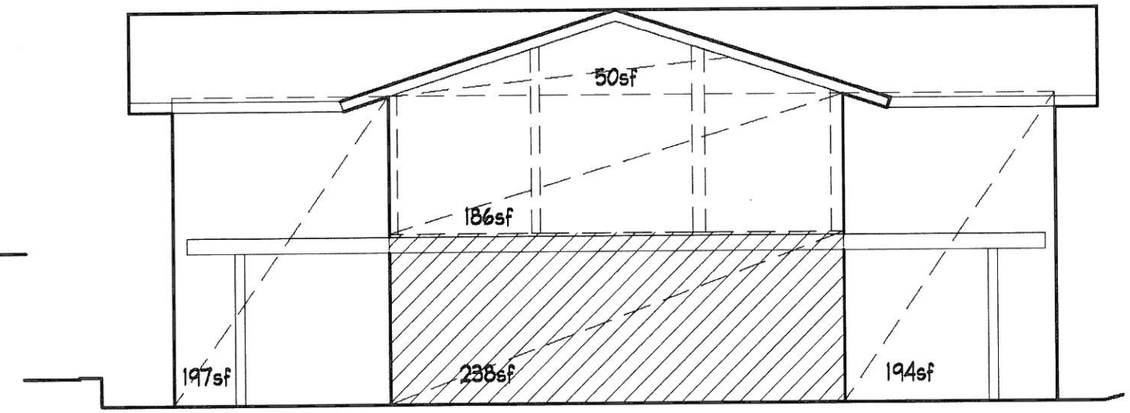

EAST

TOTAL EXISTING WALL SURFACE	865sf
EXISTING WALL TO REMAIN	238sf

1235/2468 = 50%

Amount may vary, to maintain 45-50%, following structural analysis and design.

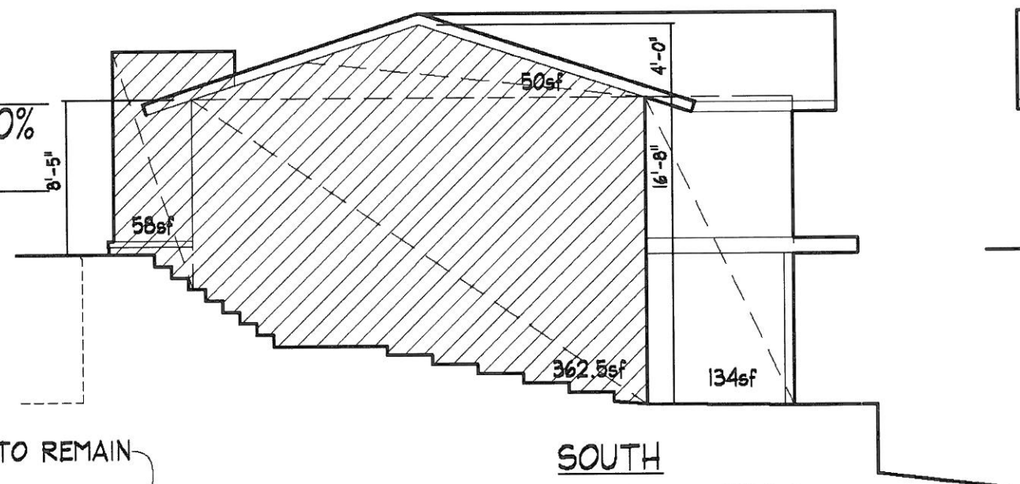

SOUTH

TOTAL EXISTING WALL SURFACE	590.5sf
EXISTING WALL TO REMAIN	470.5sf

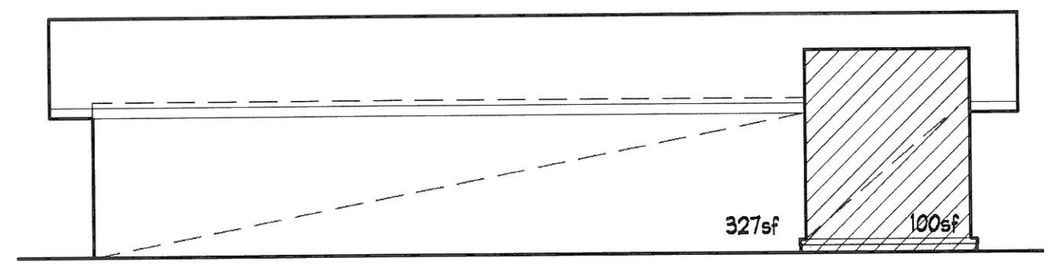

WEST

TOTAL EXISTING WALL SURFACE	427sf
EXISTING WALL TO REMAIN	100sf

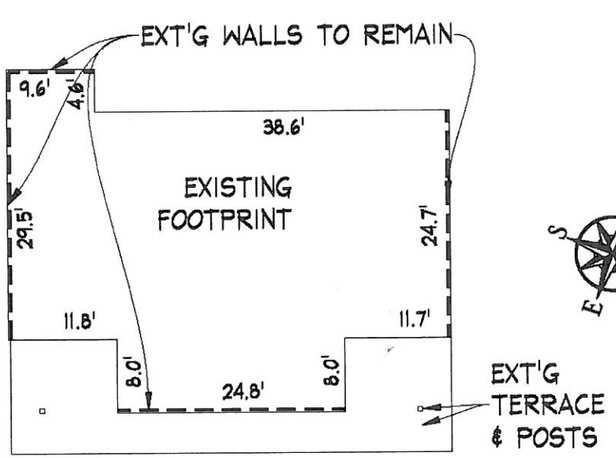

ZANTZINGER RESIDENCE - 2520 44TH STREET, NW - WALL CALCULATION